* 0000800000001 *

Cambridge Assessment International Education

Cambridge International AS & A Level

CANDIDATE NAME

CENTRE NUMBER

CANDIDATE NUMBER

* 5 3 5 7 2 5 2 7 4 2 *

PHYSICS **9702/32**

Paper 3 Advanced Practical Skills 2 **May/June 2025**

2 hours

You must answer on the question paper.

You will need: The materials and apparatus listed in the confidential instructions

INSTRUCTIONS

- Answer **all** questions.
- Use a black or dark blue pen. You may use an HB pencil for any diagrams or graphs.
- Write your name, centre number and candidate number in the boxes at the top of the page.
- Write your answer to each question in the space provided.
- Do **not** use an erasable pen or correction fluid.
- Do **not** write on any bar codes.
- You will be allowed to work with the apparatus for a maximum of 1 hour for each question.
- You should record all your observations in the spaces provided in the question paper as soon as these observations are made.
- You may use a calculator.
- You should show all your working and use appropriate units.

INFORMATION

- The total mark for this paper is 40.
- The number of marks for each question or part question is shown in brackets [ ].

For Examiner's Use	
1	
2	
Total	

This document has **12** pages. Any blank pages are indicated.

© UCLES 2025

[Turn over

You may not need to use all of the materials provided.

1 In this experiment, you will investigate a light-dependent resistor (LDR).

(a) • Connect the circuit shown in Fig. 1.1.

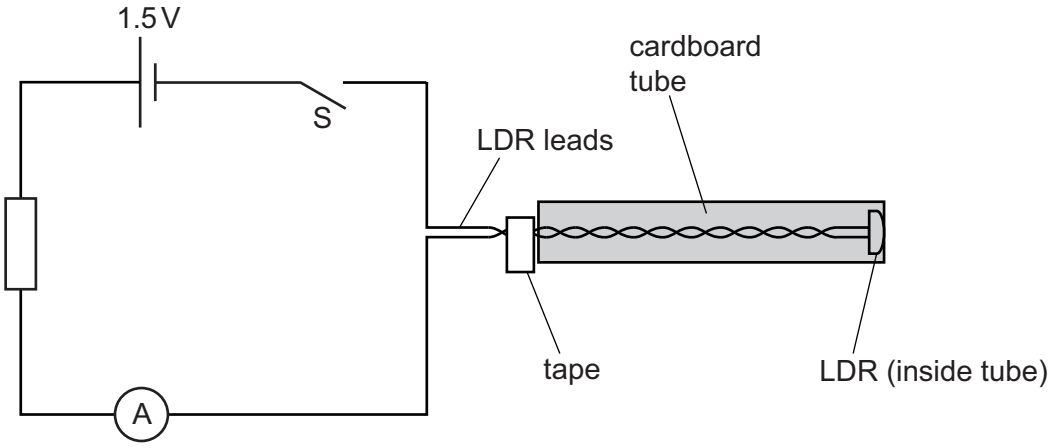

Fig. 1.1

- Ensure that the switch S is open.
- Slide the LDR leads into the tube until the front of the LDR is just level with the open end of the tube, as shown in Fig. 1.1.
- With the LDR in this position, attach a piece of adhesive tape to the leads as a marker at the other end of the tube, as shown in Fig. 1.1.
- Slide the tube until the LDR is approximately half-way along it, as shown in Fig. 1.2.

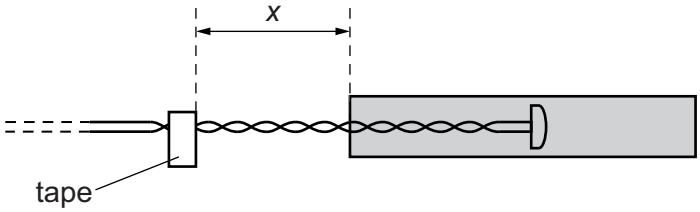

Fig. 1.2

DO NOT WRITE IN THIS MARGIN
DO NOT WRITE IN THIS MARGIN
DO NOT WRITE IN THIS MARGIN
DO NOT WRITE IN THIS MARGIN
DO NOT WRITE IN THIS MARGIN

- The distance between the tape and the tube is x.

  Measure and record x.

  x = ...

- Close S and record the ammeter reading I.

  I = ...

- Open S.

[2]

DO NOT WRITE IN THIS MARGIN
DO NOT WRITE IN THIS MARGIN
DO NOT WRITE IN THIS MARGIN
DO NOT WRITE IN THIS MARGIN
DO NOT WRITE IN THIS MARGIN

(b) Change x by moving the LDR to a new position inside the tube, with x in the range 4 cm to 18 cm. Record x and I.

Repeat until you have six sets of values of x and I.

Record your results in a table. Include values of $\sqrt{I}$ in your table.

[10]

(c) (i) Plot a graph of $\sqrt{I}$ on the y-axis against x on the x-axis. [3]

(ii) Draw the straight line of best fit. [1]

(iii) Determine the gradient and y-intercept of this line.

gradient = ...

y-intercept = ...
[2]

DO NOT WRITE IN THIS MARGIN
DO NOT WRITE IN THIS MARGIN
DO NOT WRITE IN THIS MARGIN
DO NOT WRITE IN THIS MARGIN
DO NOT WRITE IN THIS MARGIN

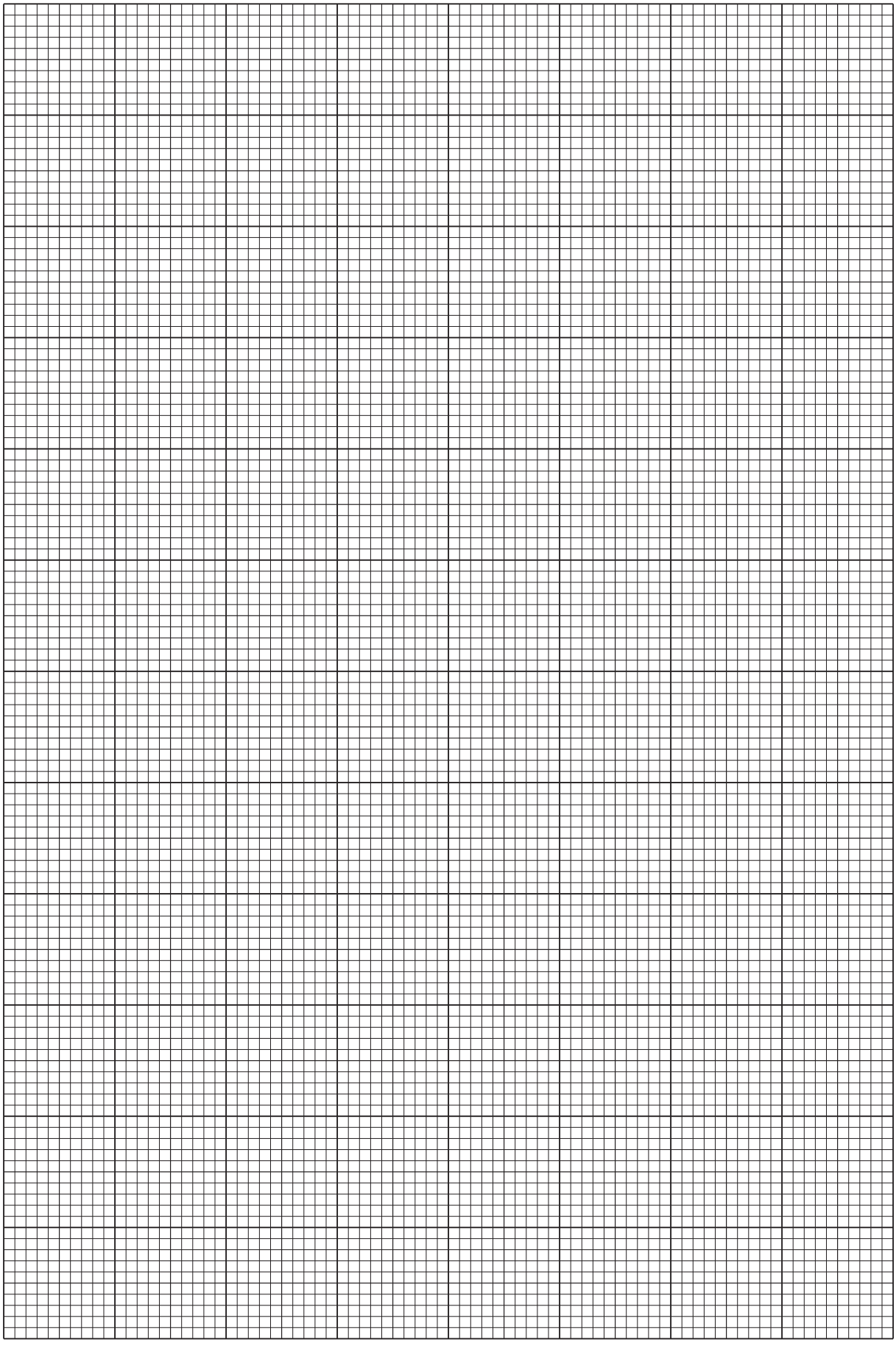

DO NOT WRITE IN THIS MARGIN
DO NOT WRITE IN THIS MARGIN
DO NOT WRITE IN THIS MARGIN
DO NOT WRITE IN THIS MARGIN
DO NOT WRITE IN THIS MARGIN

(d) It is suggested that the quantities I and x are related by the equation

$$\sqrt{I} = ax + b$$

where a and b are constants.

Using your answers in **(c)(iii)**, determine the values of a and b.
Give appropriate units.

a = ...

b = ...
[2]

[Total: 20]

DO NOT WRITE IN THIS MARGIN
DO NOT WRITE IN THIS MARGIN
DO NOT WRITE IN THIS MARGIN
DO NOT WRITE IN THIS MARGIN
DO NOT WRITE IN THIS MARGIN

You may not need to use all of the materials provided.

2 In this experiment, you will investigate the elastic properties of rubber cord.

(a) (i) You are provided with a wire with a clip and two slotted masses attached, as shown in Fig. 2.1.

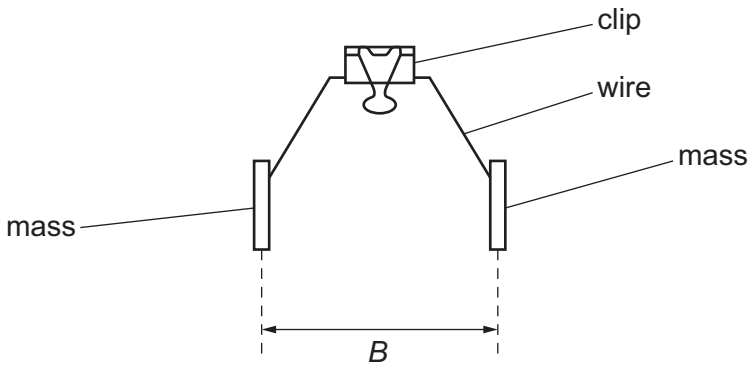

Fig. 2.1

The distance between the centres of the two slotted masses is *B*, as shown in Fig. 2.1.

Measure and record *B*.

B = ... [1]

(ii) Estimate the percentage uncertainty in your value of *B*. Show your working.

percentage uncertainty = ...% [1]

DO NOT WRITE IN THIS MARGIN
DO NOT WRITE IN THIS MARGIN
DO NOT WRITE IN THIS MARGIN
DO NOT WRITE IN THIS MARGIN
DO NOT WRITE IN THIS MARGIN

(b) (i) • You are provided with two lengths of rubber cord. Select the **longer** cord.

• The diameter of the cord is *d*.

Measure and record *d*.

d = ... [1]

(ii) • Suspend the clip, wire and masses using the **longer** cord secured in the two clips, as shown in Fig. 2.2.

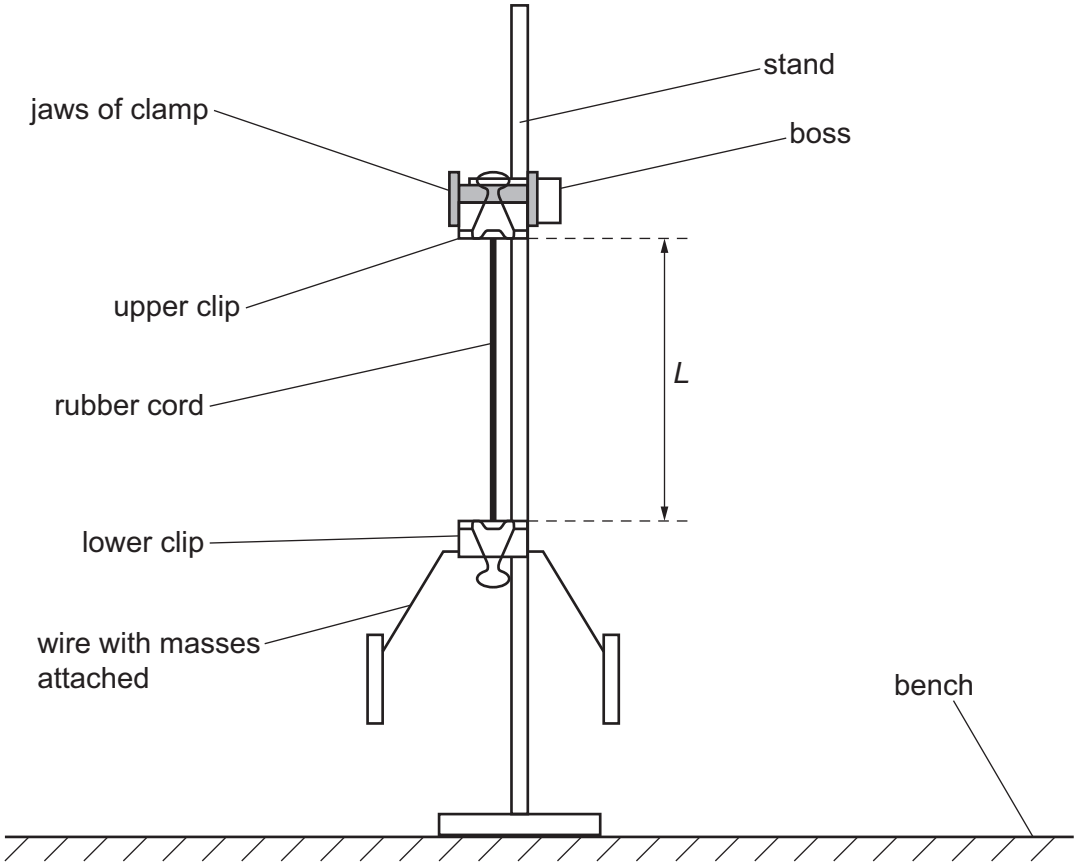

Fig. 2.2 (not to scale)

• The length of cord between the two clips is *L*, as shown in Fig. 2.2.

Measure and record *L*.

L = ... [1]

DO NOT WRITE IN THIS MARGIN
DO NOT WRITE IN THIS MARGIN
DO NOT WRITE IN THIS MARGIN
DO NOT WRITE IN THIS MARGIN
DO NOT WRITE IN THIS MARGIN

(iii) • Keeping the cord vertical, rotate the lower clip through approximately 180° and release the clip. The clip will rotate with a small number of oscillations.

• Take measurements to determine the period T of these oscillations.

T = ... s [2]

(c) Using the **shorter** length of rubber cord, repeat **(b)**.

d = ...

L = ...

T = ... s
[3]

DO NOT WRITE IN THIS MARGIN
DO NOT WRITE IN THIS MARGIN
DO NOT WRITE IN THIS MARGIN
DO NOT WRITE IN THIS MARGIN
DO NOT WRITE IN THIS MARGIN

(d) It is suggested that the relationship between T, B, L and d is

$$T^2 = \frac{B^2 L}{k d^4}$$

where k is a constant.

(i) Using your data, calculate **two** values of k.

first value of k = ...

second value of k = ...

[1]

(ii) Justify the number of significant figures that you have given for your values of k.

.....

.....

..... [1]

(e) It is suggested that the percentage uncertainty in the values of k is 20%.

Using this uncertainty, explain whether your results support the relationship in **(d)**.

.....

.....

.....

..... [1]

DO NOT WRITE IN THIS MARGIN

(f) (i) Describe **four** sources of uncertainty or limitations of the procedure for this experiment.

For any uncertainties in measurement that you describe, you should state the quantity being measured and a reason for the uncertainty.

1 .....

.....

2 .....

.....

3 .....

.....

4 .....

.....

[4]

(ii) Describe **four** improvements that could be made to this experiment. You may suggest the use of other apparatus or different procedures.

1 .....

.....

2 .....

.....

3 .....

.....

4 .....

.....

[4]

[Total: 20]

DO NOT WRITE IN THIS MARGIN
DO NOT WRITE IN THIS MARGIN
DO NOT WRITE IN THIS MARGIN
DO NOT WRITE IN THIS MARGIN
DO NOT WRITE IN THIS MARGIN

BLANK PAGE

DO NOT WRITE IN THIS MARGIN
DO NOT WRITE IN THIS MARGIN
DO NOT WRITE IN THIS MARGIN
DO NOT WRITE IN THIS MARGIN
DO NOT WRITE IN THIS MARGIN

Permission to reproduce items where third-party owned material protected by copyright is included has been sought and cleared where possible. Every reasonable effort has been made by the publisher (UCLES) to trace copyright holders, but if any items requiring clearance have unwittingly been included, the publisher will be pleased to make amends at the earliest possible opportunity.

To avoid the issue of disclosure of answer-related information to candidates, all copyright acknowledgements are reproduced online in the Cambridge Assessment International Education Copyright Acknowledgements Booklet. This is produced for each series of examinations and is freely available to download at www.cambridgeinternational.org after the live examination series.

Cambridge Assessment International Education is part of Cambridge Assessment. Cambridge Assessment is the brand name of the University of Cambridge Local Examinations Syndicate (UCLES), which is a department of the University of Cambridge.